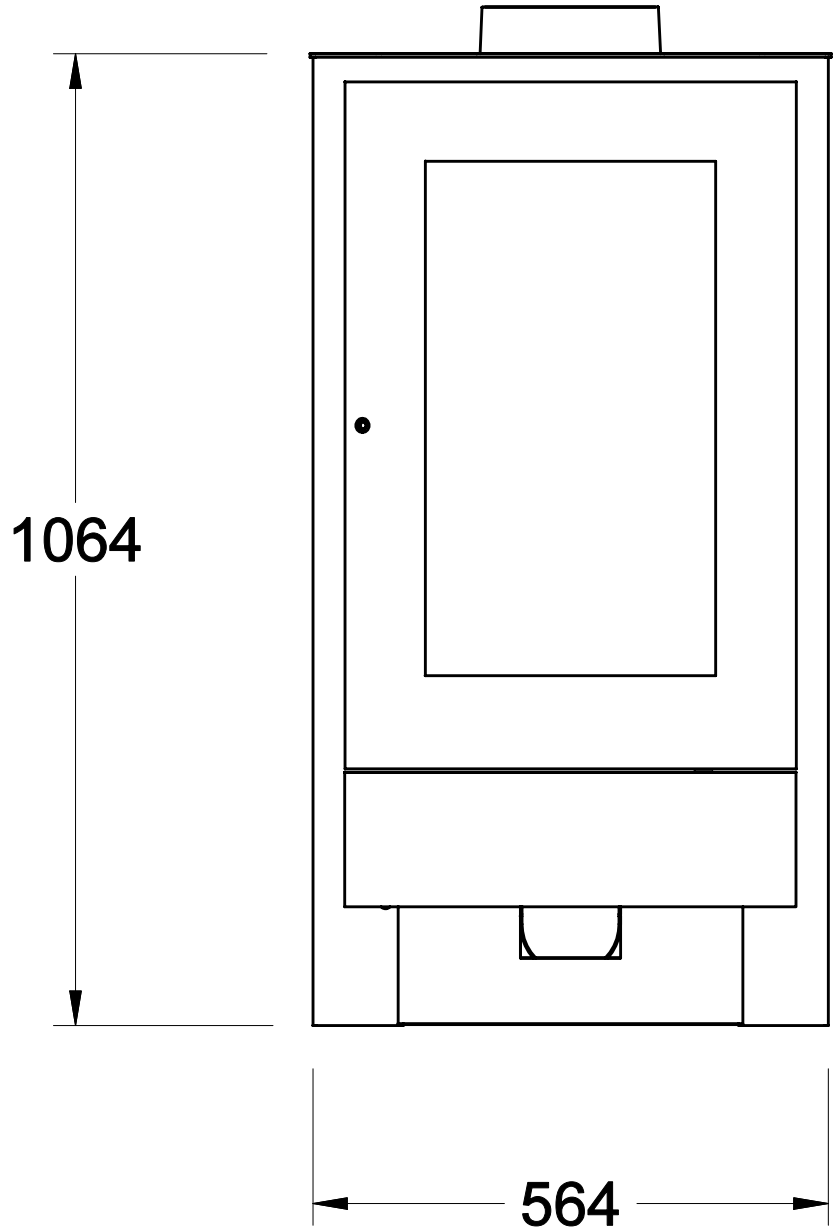

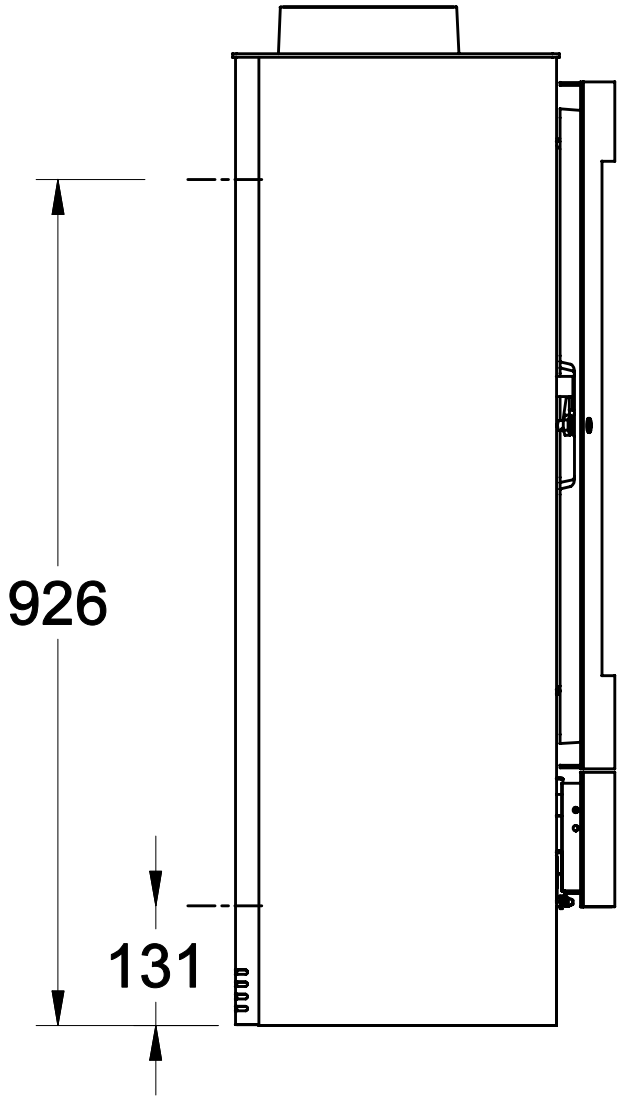

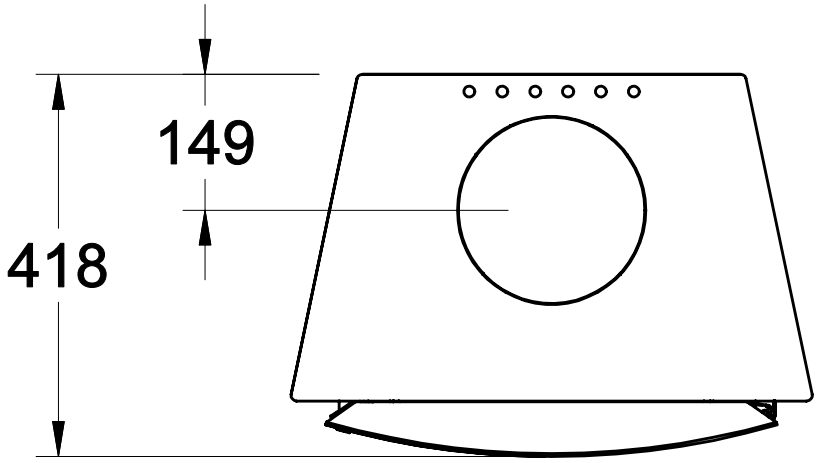

RH33